Digital Drive Panorama Base

PS-30B User's Manual

CONTENT

Safety Precautions 1

Chapter 1 Summary.....3
1.1 Component schematic illustration 3

Chapter 2 Description of parts and their manipulation.....4
2.1 The main components and accessories..... 4
2.2 Installation 6

Chapter 3 Operation Guide.....9
3.1 Using instruction 9
3.1.1 Unit Guide.....9
3.1.2 Main menu..... 10
3.1.3 Setup menu.....12
3.2 Kinds of DSLR cameras supporting..... 17
3.3 Examples 18

Safety Precautions

To prevent fire or electric shock, keep it away from moisture.

Battery

1. The battery is provided by four AA batteries. Read notes below prior to using of those batteries.
   - Do not burn the battery.
   - Please keep it away from metal objects when it is not used. Make sure both battery cap and battery installed correctly during transportation.
   - If the battery does not be capped, Please use a plastic bags to protect it instead.
   - Do not modify or dismantle the battery.
   - Do not expose the battery in temperature exceeds 60°C, the battery may overheat, explosion or fire.
   - Please use the dedicated charger if using rechargeable batteries, so as to avoid damage to the machine.

2. In order to avoid damage and prolong battery life
   - To avoid shaking or over vibration.
   - Please charge battery between temperature 10°C and 35°C if using rechargeable batteries.
   - Store it at a cool and dry place. Exposure the battery in high temperature environment for long will cause the battery be discharged and shorten battery's using hours.
   - When the machine leaves idle for a long period, please remove the batteries from the machine.

Main unit

1. In order to keep main unit safe,
   - Do not open or modify the main unit.
   - Do not let combustible, water or metal objects penetrate into the main unit.
   - Do not unplug the battery or disconnect the power supply when the

main unit is being started or in starting mode.

- Do not place the main body close to naked fire, such as lighted candles, etc.
- Keep the main body away from dripping or splashing water.

2. Should not use the equipment in the following circumstances:
    - High humidity or dusty place.
    - Cigarette ash or the steam place, for example kitchen stove place.
    - Shaking or over vibration place.
    - Close to Television set.
    - Have a strong magnetic and electric field (i.e. Speakers, broadcasting antennas, etc.).
    - Area with too high temperature (over 40°C) or too low temperature (below 0°C) place.
    - Low pressure areas (more than 3000m above sea level).

3. Do not place equipment in the following places:
    - Area in temperature over 50°C
    - Area with too low humidity (less than 35%) or too high humidity (more than 80%).
    - Area with direct sun light.
    - Inside a closed car compartment during a hot summer time.
    - Place near a heater.

4. In order to well protect equipment and maintain it in a good condition:
    - Do not get wet the equipment
    - Do not drop and impact the equipment with hard object
    - Do not shake or over vibrate the equipment during transportation.
    - Do not point camera lens directly to the bright object for long period.
    - Do not point or expose lens to any direct sunbeam.
    - After you finished the photograph, please unload your camera and panoramic base from the tripod for moving, so as not to damage your valuable camera.
    - Take attention of the direction of the L frame, please ensure the red line point at right angle.(the default value is zero)

Chapter 1 Summary

Component schematic illustration

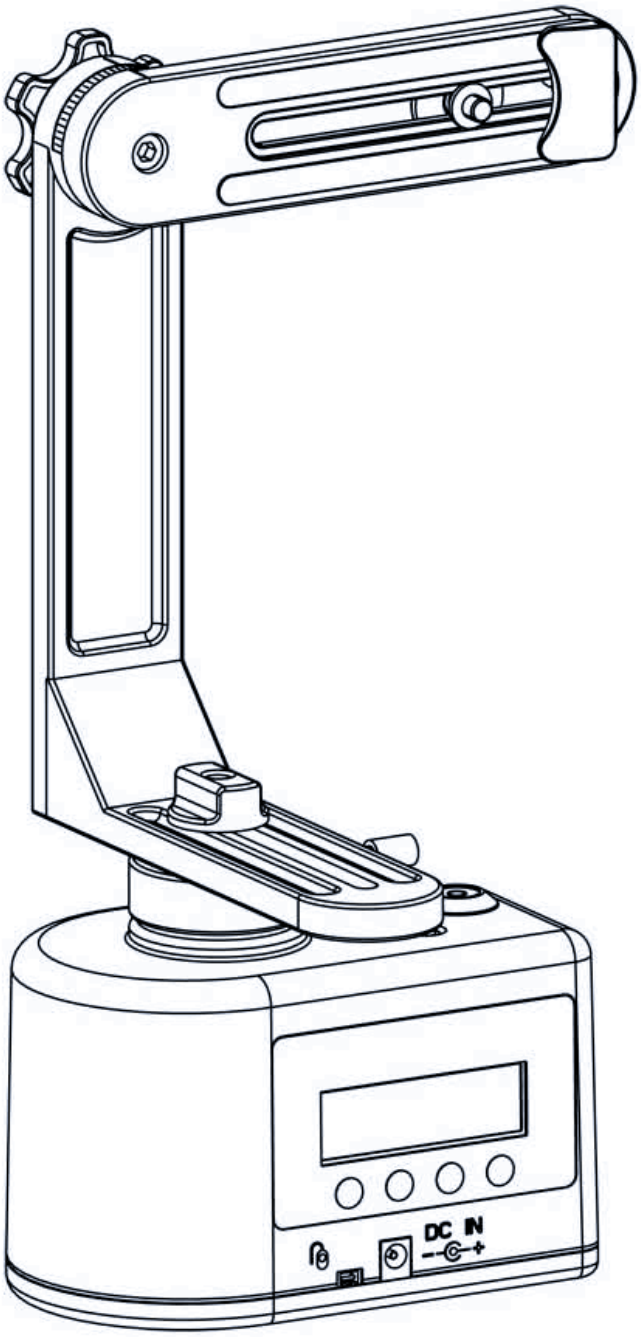

Chapter 2 Description of parts and their manipulation

2.1 The main components and accessories

1. Horizontal Connecting Plate

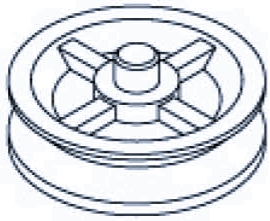

Use the screw for the horizontal installation

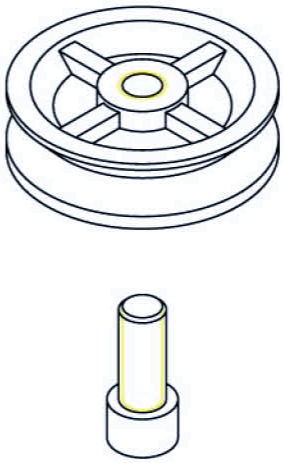

Remove the screw when use the vertical tripod

2. Vertical Tripod

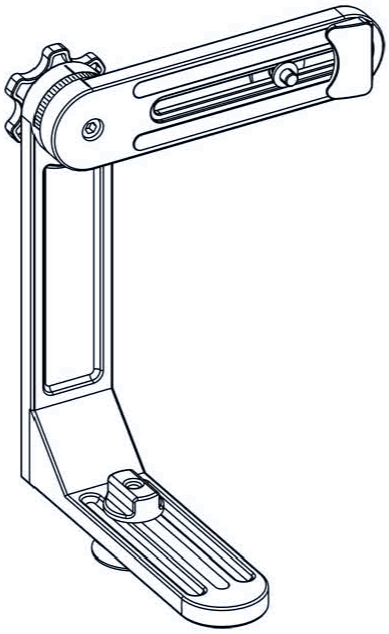

3. Rotary Drive (main body)

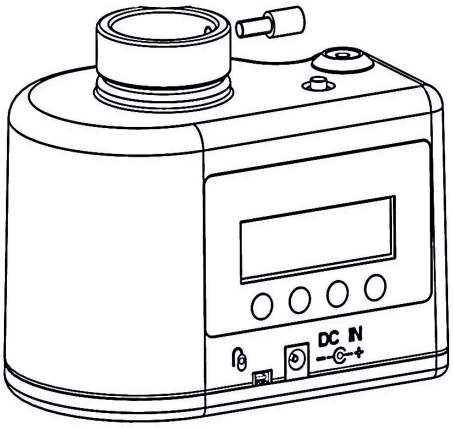

4. Cable Release

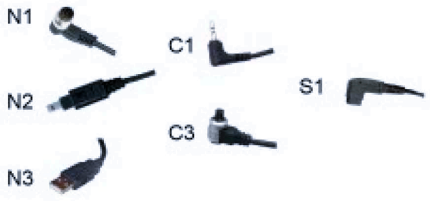

5. Four AA Batteries

6. CD （User Manual included) and Certificate

2.2 Installation

Attention: before going on to the next step, please check whether the packing is complete; all components and accessories are included.

Step of installation:

1. Plan for your panoramic picture composition first and then choose either Horizontal Connecting Plate or Vertical tripod that well fits and covers all capture areas you need. 。

2. Please completed the Installation of the Horizontal Connecting Plate or Vertical tripod.

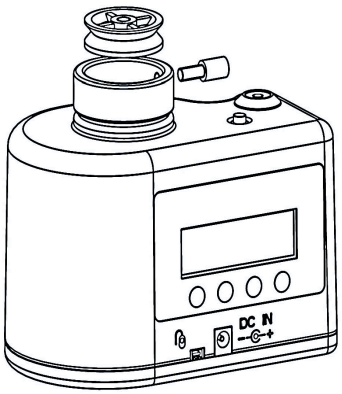

(1) Horizontal

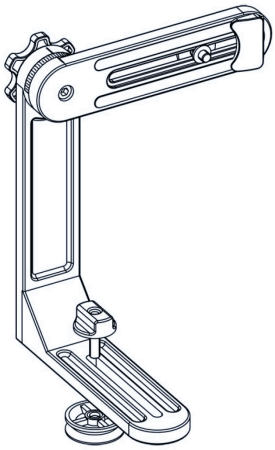

(2) Vertical

3. Load the rotary drive and the holder well, and locking bolts to be fixed.

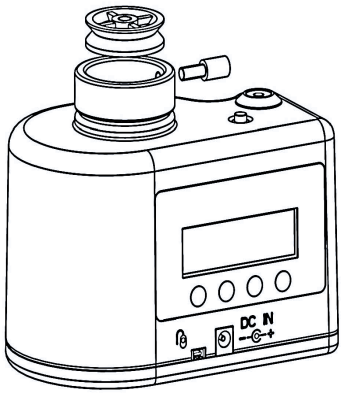

(1) Horizontal

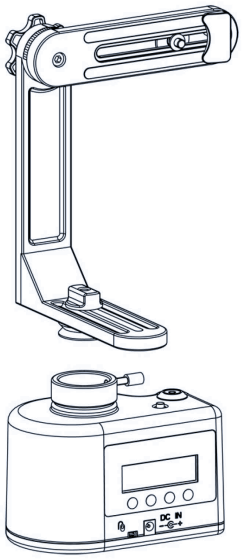

(2) Vertical

4. Load four AA batteries, note the positive and negative electrodes.

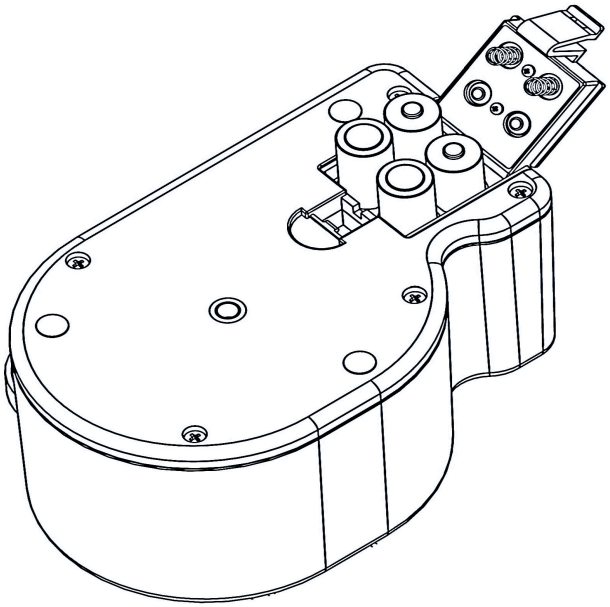

5. Choose the correct cable release for your DSLR camera (Ref. Item 3.2), link your camera to the machine

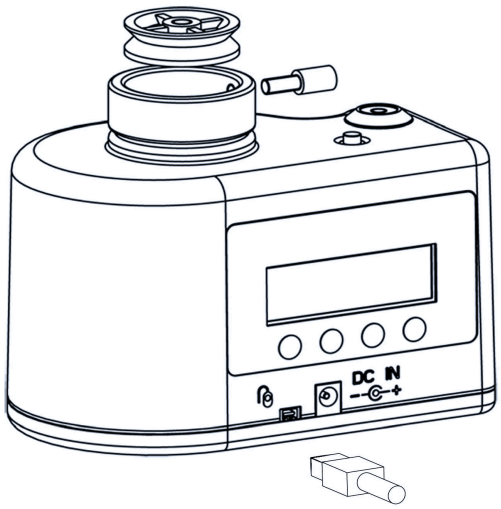

6. When you finished all above operations, the entire installation process of the camera has been completed.

(1) Horizontal

(2) Vertical

Chapter 3 Operation Guide

3.1 Using instruction

3.1.1 Unit Guide

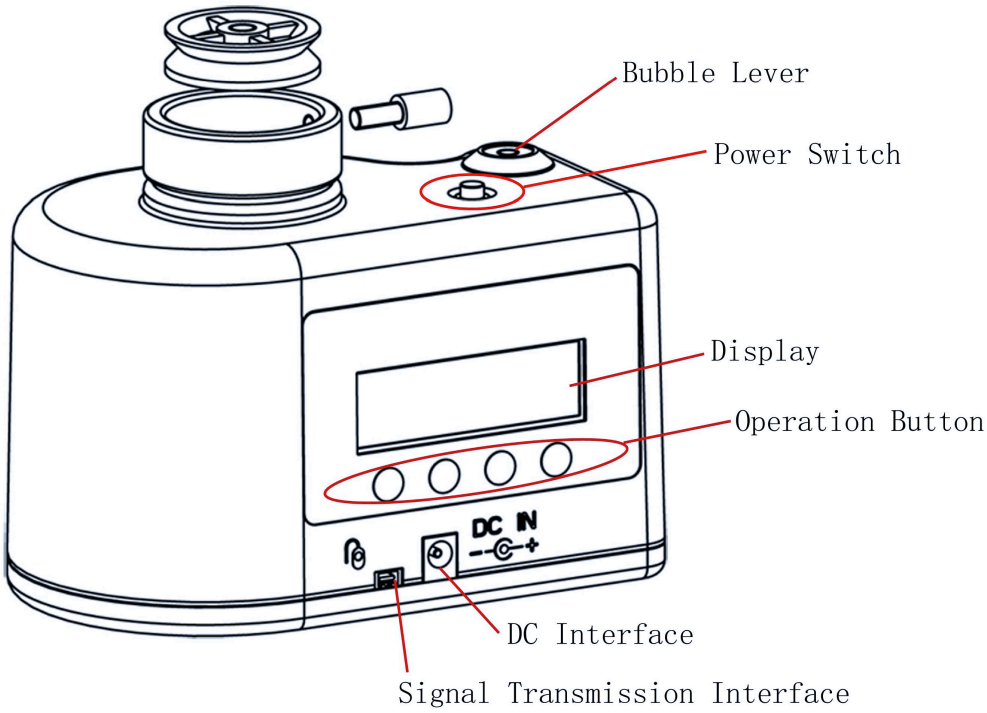

Operation buttons are (from left to right): ↑, ↓, start, and menu

Button	Function
↑	page up/ increase
↓	page down / decrease
Start	Confirm and save/ Start shooting
Menu	Setup/ Cancel / Exit

3.1.2 Main menu

Turn on the power and unit will enter the Main Menu.

If it is not at the starting position when you power on the machine, the base will reset automatically, and meanwhile it will show "Initializing" on the screen.
If the unit is at the starting position during power on or it has returned to the starting position after power on, the screen will display the Main Menu.

Main Menu

Start button

When press the "Start" button in the main menu, the machine will take shoot automatically with the setup value. The screen will show "shooting". After the camera's shutter is connected, black dots will appear on the bottom of the screen. And it will return to the main menu when the shooting is completed.
If you press the "Menu" button when the screen is showing "shooting", then the shooting will be stopped, if you press the "Menu" button again, the shooting will be canceled and the machine will return to the starting position.

After the camera's shutter is connected, black dots are showing at the bottom of the screen.

Menu button - enter the Setup Menu

Setup Menu has 5 options: 1. Shoot, 2. Time, 3. Speed, 4. Function, 5. Language.

3.1.3 Setup Menu

Menu Items Explanation

Item	Setup Menu	Sub Menu	Value Setting
	* Press "Menu" button to enter the Setup Menu. Use "↑"button or "↓" button to select the item. Press "start" button to confirm the selection and enter the Sub Menu.	* Use "↑"button or "↓" button to select. Press "start" button to confirm the selection and enter the Value Setting section. Press "menu" button to return to the Setup Menu.	* Use "↑"button or "↓" button to select the value. Press "start" button to confirm the value selected. Press "menu" button to return to the Sub Menu.
1	Shoot	Angle	0~540
		Freq (frequency)	0~540
2	Time	Before SH (shoot)	0.0~99
		After SH(shoot)	0.0~99
3	Speed	Shutter	0.1-1.0
		Rotate	H(high)/M(middle)/L(low)
4	Function	Direction	C W (clockwise) /CCW(CounterClockWise)
		Mode	T (test)/N (normal)
5	Language	English/Chinese or Portuguese or Russian etc	

1. Shoot

Press "↑" button or "↓" button to select "Shoot" menu (see 1-1). Press "start" button to confirm the selection and Sub Menu "Angle" and "Freq" will show up (see 1-2). Select the item you want to adjust and press "start" button again. The values will have triangles beside it then you can use "↑" button or "↓" button to adjust the value to the one you wanted (see 1-3). Press "start" button to confirm the value selected. Press "menu" button to return to the Sub Menu.

1-1

1-2

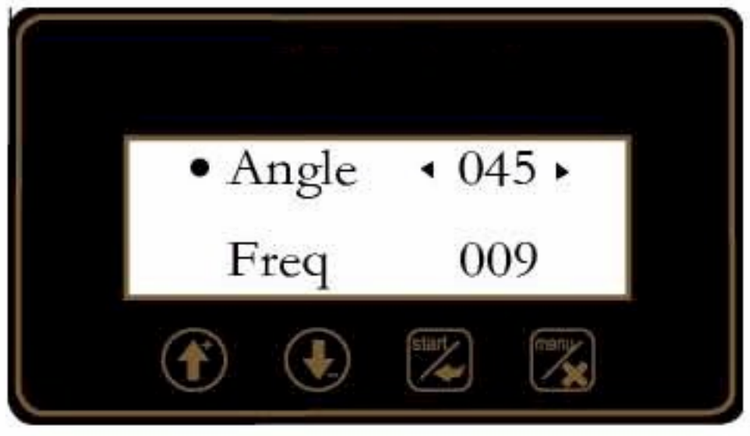

1-3

The "Angle" is used to control the angle of revolution for each shutter press.
The "Freq" is used to set the total numbers of shooting for each shooting session.
For example: For a 360 degree shooting session, you can set the Angle to 30 degree (per shot) and Freq to 13 shots (one extra shot to complete the circle, the shutter will be pressed at 0, 30, 60, 90, 120, 150, 180, 210, 240, 270, 300, 330, and 360/0 degrees) or Angle 20 and Freq 19.
Note:

- Angle X (Freq-1) < 540 (540 degree is the largest revolution degree)
  Angel value can be set between 0 ~ 540. When the setting are set at Angle X (Freq-1) > 540, the Freq will automatically reset to (540 / Angle) +1. This the largest shutter pressing frequency for the setting.
- Press the "Menu" button from the Angle / Freq Sub Menu, the screen will show the total degree of revolution for the setting. (See 1-4).

1-4

2. Time

Press "↑" button or "↓" button to select "Time" menu (see 2-1). Press "start" button to confirm the selection and Sub Menu "Before SH" and "After SH" will show up (see 2-2). Select the item you want to adjust and press "start" button again. The values will have triangles beside it then you can use "↑" button or "↓" button to adjust the value to the one you wanted (see 2-3). Press "start" button to confirm the value selected. Press "menu" button to return to the Sub Menu.

2-1

2-2

2-3

"Time" item has two Sub Menu - "Before SH" and "After SH".
"Before SH" (Before shoot) is the time in second the unit will pause from rotating motion stopped to pressing the shutter.
"After SH" (After shoot) is the time in second the unit will pause from shutter pressed to the rotation motion starting again. This function is used to allow extra time when using slow shutter speed.

3. Speed

Press "↑" button or "↓" button to select "Speed" menu (see 3-1). Press "start" button to confirm the selection and Sub Menu "Shutter" and "Rotate" will show up (see 3-2). Select the item you want to adjust and press "start" button again. The values will have triangles beside it then you can use "↑" button or "↓" button to adjust the value to the one you wanted (see 3-3). Press "start" button to confirm the value selected. Press "menu" button to return to the Sub Menu.

3-1

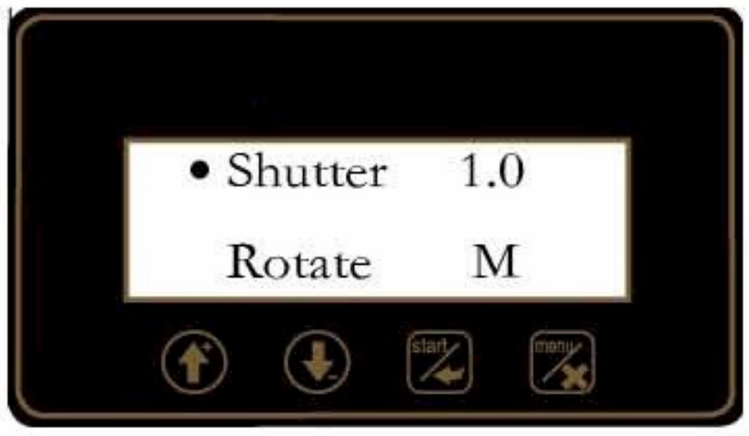

3-2

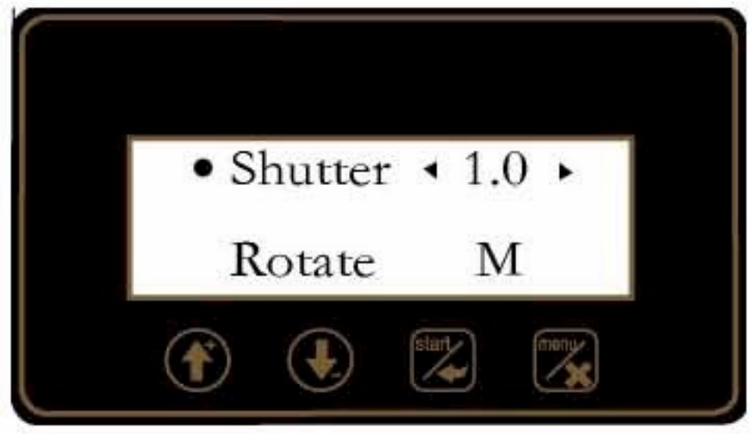

3-3

"Speed" item has two Sub Menu - "Shutter" and "Rotate".

"Shutter" is the time in second the unit will control the shutter's on-off time.

"Rotate" is the speed of the unit rotate. It has 3 gears, H (high), M (medium) and L (Low). In general we recommend using the "M" gear. Use "L" gear when using a heavy camera.

4. Function

Press "↑" button or "↓" button to select "Function" menu (see 4-1). Press "start" button to confirm the selection and Sub Menu "Direction" and "Mode" will show up (see 4-2). Select the item you want to adjust and press "start" button again. The values will have triangles beside it then you can use "↑" button or "↓" button to adjust the value to the one you wanted (see 4-3). Press "start" button to confirm the value selected. Press "menu" button to return to the Sub Menu.

4-1

4-2

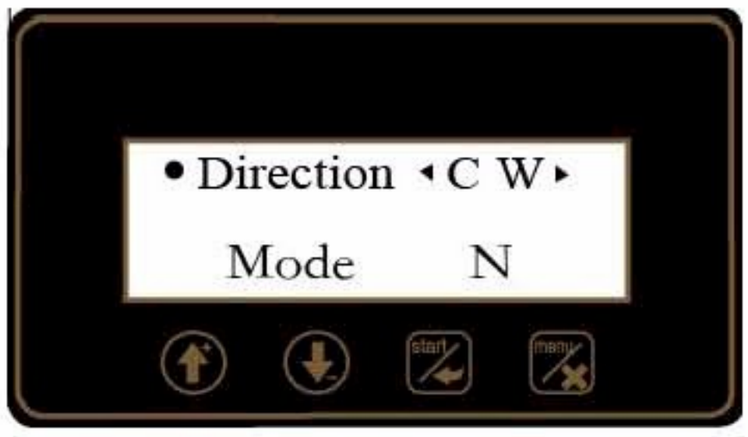

4-3

"Function" item has two Sub Menu - "Direction" and "Mode".

"Director" has 2 modes – "C W (clockwise rotation) or /CCW(CounterClockWise rotation)"
"Mode" has 2 modes – "N" (Normal) or "T" (Test).
"T" (Test) mode is for testing the overlapping of the 2 pictures and finding the best rotation angles for each shot. After setting the Angle and Freq, this mode will take 2 shots and then stop. You can check the 2 pictures to see if the setting is satisfactory.
"N" (Normal) mode is the normal mode of operation.

5. Language

Press "↑" button or "↓" button to select "Language" menu (see 5-1). Press "start" button to confirm the selection and Sub Menu "中文" (Chinese) or "English" will show up (see 5-2). Select the language display you want and press "start" button to confirm the value selected. Press "menu" button to return to the Setup Menu.

5-1

5-2

When all the setting are done, press "menu" button until the screen is out to the Main Menu, then press the "start" button to start shooting.
Notes:

- Within Main Menu screen and no operation for over 1 minute, the screen will turn off automatically.
- Within Sub Menu or Value Setting screen and no operation for over one minute, the screen will automatically back out to the Main Menu.

3.2 Kinds of DSLR cameras supporting

N1: Nikon F6, F5, F90, F90x, F100, D3, D1/D1H/D1X, D2/D2H/D2X, D3/D3X/D100/D200/D300/D700, Kodak DSC-14N, Fujifilm S3pro/S5pro

N2: Nikon D70S/D80/D60

N3: Nikon D90/D3000/D5000

C1: CANON EOS 30/33/30/50/ 300/300D/350D/400D/450D/100D/500D/1000D /1000D/30V/300V/50E/500/500N
CONTAX N, CONTAX 645,
PENTAX ISISTD/ISTDL/IST/MZ-6/ZX-L/MZ-L,
K10D/K20D/K100D/K100DL,
SUMSUNG GX-1L/GX-1S/AND CANON RS-60E3

C3: CANON EOS1V, EOS3, EOS1D/1DS/1DSMKⅡ/1DSMKⅢ,
EOSD30, EOS 10D/20D/30D/40D/5D/5DⅡ, EOSD60, EOS7D,
EOS 1D Mark II N/EOS-1D Mark II/EOS-1D Mark III/EOS-1D Mark IV,
EOS-1V and CANON RS-80N3

S1: SONY A100 AND RM-S1AM, A200/A300/A350/A500/A550/A700/A850/A900
DYANX 5D/7D, MAXXUM 5D/7D, DIMAGE A1/A2/5/7/I/7HI
and RC-1000L

3.3 Examples

An example for take a 180 degree group photo

1. Use vertical holder and vertical camera shooting style

2. Set turning angle as 30, 7 times to make a 180 degree wide photo (there must be some overlap part between every two-shoot, the more overlap part you take the better stitching result it will be. As the overlap part will be covered in stitching process, actually you will need 210 degree to make the best result for a 180 degree wide photo

3, Start shooting

4. Extract every unprocessed single photo, use particular panorama software to finish stitching process (such as photoshop, zoner panorama maker etc.)

5. Use particular panorama software to finish the final modifies process.